19-0182; Rev 3; 9/95

5V/3.3V/3V 5A Step-Down, PWM, Switch-Mode DC-DC Regulators

General Description

The MAX787/MAX788/MAX789 are monolithic, bipolar, pulse-width modulation (PWM), switch-mode, step-down DC-DC regulators. Each is rated at 5A. Very few external components are needed for standard operation because the power switch, oscillator, feedback, and control circuitry are all on-chip. Employing a classic buck topology, these regulators perform high-current step-down functions.

The MAX787/MAX788/MAX789 have excellent dynamic and transient response characteristics, while featuring cycle-by-cycle current limiting to protect against overcurrent faults and short-circuit output faults. They also have a wide 8V to 40V input range.

Each regulator is available in a 5-pin TO-220 package. These devices have a preset 100kHz oscillator frequency and a preset current limit of 6.5A. See the MAX724/MAX726 data sheet for more applications information.

Applications

Distributed Power from High-Voltage Buses
High-Current, High-Voltage Step-Down
Multiple-Output Buck Converter

Typical Operating Circuit

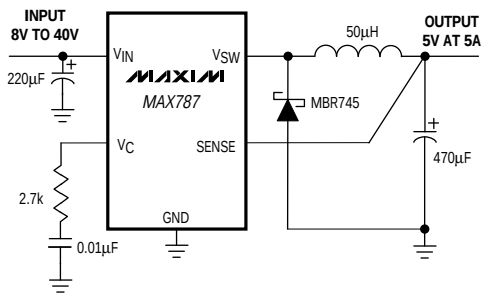

STEP-DOWN CONVERTER

Features

- **Input Range: Up to 40V**
- **5A On-Chip Power Switch**
- **Fixed Outputs: 5V (MAX787)**
  3.3V (MAX788)
  3V (MAX789)
- **100kHz Switching Frequency**
- **Excellent Dynamic Characteristics**
- **Few External Components**
- **8.5mA Quiescent Current**
- **TO-220 Package**

Ordering Information

PART	TEMP. RANGE	PIN-PACKAGE
MAX787CCK	0°C to +70°C	5 TO-220
MAX787ECK	-40°C to +85°C	5 TO-220
MAX788CCK	0°C to +70°C	5 TO-220
MAX788ECK	-40°C to +85°C	5 TO-220
MAX789CCK	0°C to +70°C	5 TO-220
MAX789ECK	-40°C to +85°C	5 TO-220

Product Selection Guide

PART	V_{OUT} (V)	I_{OUT} MAX (A)
MAX724	Adjustable	5
MAX726	Adjustable	2
MAX727	5	2
MAX728	3.3	2
MAX729	3	2
MAX787	5	5
MAX788	3.3	5
MAX789	3	5

Pin Configuration

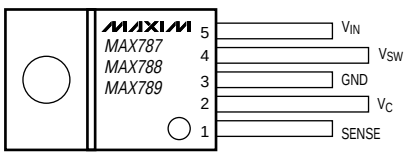

5-PIN TO-220

CASE IS CONNECTED TO GROUND. STANDARD PACKAGE HAS STAGGERED LEADS. CONTACT FACTORY FOR STRAIGHT LEADS.

Call toll free 1-800-998-8800 for free samples or literature.

5V/3.3V/3V 5A Step-Down, PWM, Switch-Mode DC-DC Regulators

ABSOLUTE MAXIMUM RATINGS

Input Voltage 45V
Switch Voltage with Respect to Input Voltage 50V
Switch Voltage with Respect to GND Pin (V_{SW} negative) (Note 1) 35V
SENSE Pin Voltage ..... -0.3V, +10V
Operating Temperature Ranges
MAX78_CCK ..... 0°C to +70°C
MAX78_ECK ..... -40°C to +85°C
Junction Temperature Ranges
MAX78_CCK ..... 0°C to +125°C
MAX78_ECK ..... -40°C to +125°C
Storage Temperature Range ..... -65°C to +160°C
Lead Temperature (soldering, 10sec) ..... +300°C

Stresses beyond those listed under "Absolute Maximum Ratings" may cause permanent damage to the device. These are stress ratings only, and functional operation of the device at these or any other conditions beyond those indicated in the operational sections of the specifications is not implied. Exposure to absolute maximum rating conditions for extended periods may affect device reliability.

ELECTRICAL CHARACTERISTICS

(V_{IN} = 25V, T_j = T_{MIN} to T_{MAX}, unless otherwise noted.)

PARAMETER	CONDITIONS		MIN	TYP	MAX	UNITS
Input Supply Voltage Range			8.0		40.0	V
Switch-On Voltage (Note 1)	I_{SW} = 1A	$T_j \geq 0°C$			1.85	V
		$T_j < 0°C$			2.10	
	I_{SW} = 5A	$T_j \geq 0°C$			2.30	
		$T_j < 0°C$			2.50	
Switch-Off Leakage	V_{IN} = ≤ 25V, V_{SW} = 0V	T_j = +25°C		5	300	µA
	V_{IN} = 40V, V_{SW} = 0V	T_j = +25°C		10	500	
Supply Current (Note 3)	$V_{IN} \leq 40V$, V_{SENSE} = 5.5V			8.5	11	mA
Minimum Supply Voltage	Normal Mode			7.3	8.0	V
	Start-Up Mode (Note 4)	$T_j \geq 0°C$		3.5	4.8	
		$T_j < 0°C$		3.5	5.0	
Switch-Current Limit (Note 5)			5.5	6.5	8.5	A
Maximum Duty Cycle			85	90		%
Switching Frequency		T_j = +25°C	90	100	110	kHz
		$T_j \leq$ +125°C	85		120	
	V_{OUT} = V_{SENSE} = 0V (Note 5)	T_j = +25°C		20		
Switching Frequency Line Regulation	$8V \leq V_{IN} \leq 40V$			0.03	0.10	%/V
Error-Amplifier Voltage Gain	$1V \leq V_C \leq 4V$	T_j = +25°C		2000		V/V
Error-Amplifier Transconductance		T_j = +25°C	3000	5000	9000	µmho
Error-Amplifier Source Current	V_{SENSE} = V_{OUT} - 10%	T_j = +25°C	100	140	225	µA
Error-Amplifier Sink Current	V_{SENSE} = V_{OUT} + 10%	T_j = +25°C	0.6	1.0	1.7	mA

ELECTRICAL CHARACTERISTICS (continued)

(V_{IN} = 25V, T_j = T_{MIN} to T_{MAX}, unless otherwise noted.)

PARAMETER	CONDITIONS		MIN	TYP	MAX	UNITS
SENSE Voltage	V_C = 2V	MAX787	4.85	5.00	5.15	V
		MAX788	3.20	3.30	3.40	
		MAX789	2.90	3.00	3.10	
SENSE Pin Divider Resistance	T_j = +25°C	MAX787	3.0	5.0	8.0	kΩ
		MAX788	2.5	4.2	7.0	
		MAX789	2.2	3.8	6.5	
Output Voltage Tolerance	V_{OUT} (nominal) = 5V (MAX787), 3.3V (MAX788), or 3V (MAX789); all conditions of input voltage, output voltage, and load current	T_j = +25°C		±0.5	±2.0	%
		T_j = T_{MIN} to T_{MAX}		±1.0	±3.0	
Output Voltage Line Regulation	8V ≤ V_{IN} ≤ 40V			0.005	0.020	%/V
V_C Voltage	0% duty cycle	T_j = +25°C		1.5		V
V_C Voltage Temperature Coefficient	0% duty cycle	T_j = T_{MIN} to T_{MAX}		-4		mV/°C
Thermal Resistance Junction to Case (Note 6)					2.5	°C/W

Note 1: Do not exceed switch-to-input voltage limitation.
Note 2: For switch currents between 1A and 5A, maximum switch-on voltage can be calculated via linear interpolation.
Note 3: By setting the SENSE pin to 5.5V, the V_C pin is forced to its low clamp level and the switch duty cycle is forced to zero, approximating the zero load condition.
Note 4: For proper regulation, total voltage from V_{IN} to GND must be ≥ 8V after start-up.
Note 5: To avoid extremely short switch-on times, the switch frequency is internally scaled down when V_{SENSE} is less than 2.6V (MAX787), 2.0V (MAX788), or 1.8V (MAX789). Switch-current limit is tested with V_{SENSE} adjusted to give a 1µs minimum switch-on time.
Note 6: Guaranteed, not production tested.

Pin Description

PIN	NAME	FUNCTION
1	SENSE	SENSE Input is the internal error amplifier's input, and should be directly connected to V_{OUT}. SENSE also aids current limiting by reducing oscillator frequency when V_{OUT} is low.
2	V_C	Error-Amplifier Output. A series RC network connected to this pin compensates the MAX787/MAX788/MAX789. Output swing is limited to about 5.8V in the positive direction and -0.7V in the negative direction. V_C can also synchronize the MAX787/MAX788/MAX789 to an external TTL clock in the 115kHz to 170kHz range. See MAX724/MAX726 data sheet.
3	GND	Ground requires a short, low-noise connection to ensure good load regulation. The internal reference is referred to GND, so errors at this pin are multiplied by the error amplifier.
4	V_{SW}	Internal Power Switch Output. The switch output can swing 35V below ground and is rated for 5A.
5	V_{IN}	V_{IN} supplies power to the internal circuitry and also connects to the collector of the internal power switch. V_{IN} must be bypassed with a low-ESR capacitor, typically 200µF or 220µF.

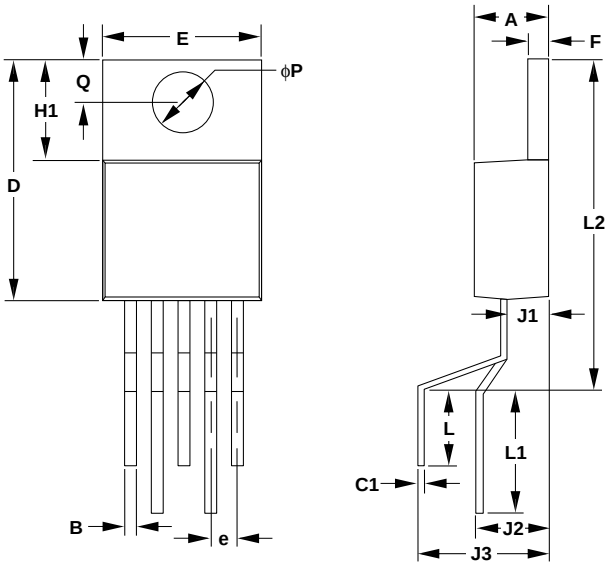

DIM	INCHES		MILLIMETERS	
	MIN	MAX	MIN	MAX
A	0.140	0.190	3.56	4.82
B	0.015	0.040	0.38	1.01
C1	0.014	0.022	0.41	0.50
D	0.560	0.650	14.23	16.51
E	0.380	0.420	9.66	10.66
e	0.067 BSC		1.70 BSC	
F	0.045	0.055	1.14	1.39
H1	0.230	0.270	5.85	6.85
J1	0.080	0.115	2.04	2.92
J2	0.170	0.185	4.32	4.70
J3	0.327	0.335	8.31	8.51
L	0.170	0.200	4.32	5.08
L1	0.260	0.340	6.60	8.64
L2	0.700	0.720	17.78	18.29
ϕP	0.139	0.161	3.54	4.08
Q	0.100	0.120	2.54	3.04

21-005-

5-PIN TO-220 (STAGGERED LEAD) PACKAGE

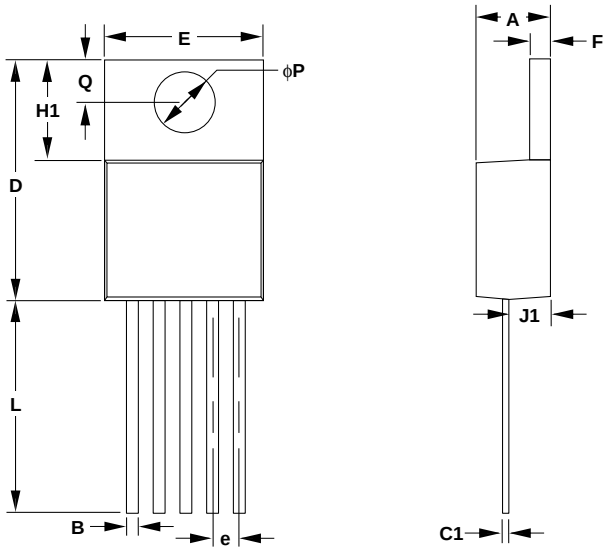

DIM	INCHES		MILLIMETERS	
	MIN	MAX	MIN	MAX
A	0.140	0.190	3.56	4.82
B	0.015	0.040	0.38	1.01
C1	0.014	0.022	0.41	0.50
D	0.560	0.650	14.23	16.51
E	0.380	0.420	9.66	10.66
e	0.067 BSC		1.70 BSC	
F	0.045	0.055	1.14	1.39
H1	0.230	0.270	5.85	6.85
J1	0.080	0.115	2.04	2.92
L	0.500	0.580	12.70	14.73
ϕP	0.139	0.161	3.54	4.08
Q	0.100	0.120	2.54	3.04

21-4737-

5-PIN TO-220 (STRAIGHT LEAD) PACKAGE

CONTACT FACTORY FOR AVAILABILITY

Maxim cannot assume responsibility for use of any circuitry other than circuitry entirely embodied in a Maxim product. No circuit patent licenses are implied. Maxim reserves the right to change the circuitry and specifications without notice at any time.

© 1995 Maxim Integrated Products Printed USA MAXIM is a registered trademark of Maxim Integrated Products.