# BTA06 and BTB06 Series

**SNUBBERLESS™, LOGIC LEVEL & STANDARD**

## 6A TRIACs

**Table 1: Main Features**

| Symbol | Value | Unit |
|---|---|---|
| $I_{T(RMS)}$ | 6 | A |
| $V_{DRM}/V_{RRM}$ | 600 and 800 | V |
| $I_{GT\ (Q_1)}$ | 5 to 50 | mA |

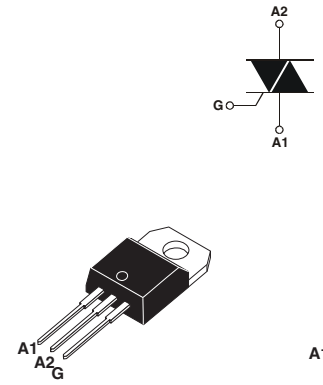


**TO-220AB Insulated (BTA06)** **TO-220AB (BTB06)**

### DESCRIPTION

Available either in through-hole or surface-mount packages, the **BTA06** and **BTB06** triac series is suitable for general purpose AC switching. They can be used as an ON/OFF function in applications such as static relays, heating regulation, induction motor starting circuits... or for phase control operation in light dimmers, motor speed controllers,...

The snubberless and logic level versions (BTA/BTB...W) are specially recommended for use on inductive loads, thanks to their high commutation performances.

By using an internal ceramic pad, the BTA series provides voltage insulated tab (rated at $2500V_{RMS}$) complying with UL standards (File ref.: E81734).

**Table 2: Order Codes**

| Part Number | Marking |
|---|---|
| BTA06-xxxxxRG | See page table 8 on page 6 |
| BTB06-xxxxxRG | |

**Table 3: Absolute Maximum Ratings**

| Symbol | Parameter | | | Value | Unit |
|---|---|---|---|---|---|
| $I_{T(RMS)}$ | RMS on-state current (full sine wave) | TO-220AB | $T_c$ = 110°C | 6 | A |
| | | TO-220AB Ins. | $T_c$ = 105°C | | |
| $I_{TSM}$ | Non repetitive surge peak on-state current (full cycle, $T_j$ initial = 25°C) | F = 50 Hz | t = 20 ms | 60 | A |
| | | F = 60 Hz | t = 16.7 ms | 63 | |
| $I^2t$ | $I^2t$ Value for fusing | $t_p$ = 10 ms | | 21 | $A^2s$ |
| dI/dt | Critical rate of rise of on-state current $I_G$ = 2 x $I_{GT}$ , $t_r \leq$ 100 ns | F = 120 Hz | $T_j$ = 125°C | 50 | A/µs |
| $I_{GM}$ | Peak gate current | $t_p$ = 20 µs | $T_j$ = 125°C | 4 | A |
| $P_{G(AV)}$ | Average gate power dissipation | | $T_j$ = 125°C | 1 | W |
| $T_{stg}$<br>$T_j$ | Storage junction temperature range<br>Operating junction temperature range | | | - 40 to + 150<br>- 40 to + 125 | °C |

**Tables 4: Electrical Characteristics** ($T_j$ = 25°C, unless otherwise specified)

■ **SNUBBERLESS and Logic Level (3 quadrants)**

| Symbol | Test Conditions | Quadrant | | BTA06 / BTB06 | | | | Unit |
|---|---|---|---|---|---|---|---|---|
| | | | | TW | SW | CW | BW | |
| $I_{GT}$ (1) | $V_D$ = 12 V $R_L$ = 30 Ω | I - II - III | MAX. | 5 | 10 | 35 | 50 | mA |
| $V_{GT}$ | | I - II - III | MAX. | 1.3 | | | | V |
| $V_{GD}$ | $V_D = V_{DRM}$ $R_L$ = 3.3 kΩ $T_j$ = 125°C | I - II - III | MIN. | 0.2 | | | | V |
| $I_H$ (2) | $I_T$ = 100 mA | | MAX. | 10 | 15 | 35 | 50 | mA |
| $I_L$ | $I_G$ = 1.2 $I_{GT}$ | I - III | MAX. | 10 | 25 | 50 | 70 | mA |
| | | II | | 15 | 30 | 60 | 80 | |
| dV/dt (2) | $V_D$ = 67 %$V_{DRM}$ gate open $T_j$ = 125°C | | MIN. | 20 | 40 | 400 | 1000 | V/µs |
| (dI/dt)c (2) | (dV/dt)c = 0.1 V/µs $T_j$ = 125°C | | MIN. | 2.7 | 3.5 | - | - | A/ms |
| | (dV/dt)c = 10 V/µs $T_j$ = 125°C | | | 1.2 | 2.4 | - | - | |
| | Without snubber $T_j$ = 125°C | | | - | - | 3.5 | 5.3 | |

■ **Standard (4 quadrants)**

| Symbol | Test Conditions | Quadrant | | BTA06 / BTB06 | | Unit |
|---|---|---|---|---|---|---|
| | | | | C | B | |
| $I_{GT}$ (1) | $V_D$ = 12 V $R_L$ = 30 Ω | I - II - III<br>IV | MAX. | 25<br>50 | 50<br>100 | mA |
| $V_{GT}$ | | ALL | MAX. | 1.3 | | V |
| $V_{GD}$ | $V_D = V_{DRM}$ $R_L$ = 3.3 kΩ $T_j$ = 125°C | ALL | MIN. | 0.2 | | V |
| $I_H$ (2) | $I_T$ = 500 mA | | MAX. | 25 | 50 | mA |
| $I_L$ | $I_G$ = 1.2 $I_{GT}$ | I - III - IV | MAX. | 40 | 50 | mA |
| | | II | | 80 | 100 | |
| dV/dt (2) | $V_D$ = 67 %$V_{DRM}$ gate open $T_j$ = 125°C | | MIN. | 200 | 400 | V/µs |
| (dV/dt)c (2) | (dI/dt)c = 2.7 A/ms $T_j$ = 125°C | | MIN. | 5 | 10 | V/µs |

**Table 5: Static Characteristics**

| Symbol | Test Conditions | | | Value | Unit |
|---|---|---|---|---|---|
| $V_{TM}$ (2) | $I_{TM}$ = 8.5 A $t_p$ = 380 µs | $T_j$ = 25°C | MAX. | 1.55 | V |
| $V_{t0}$ (2) | Threshold voltage | $T_j$ = 125°C | MAX. | 0.85 | V |
| $R_d$ (2) | Dynamic resistance | $T_j$ = 125°C | MAX. | 60 | mΩ |
| $I_{DRM}$<br>$I_{RRM}$ | $V_{DRM} = V_{RRM}$ | $T_j$ = 25°C | MAX. | 5 | µA |
| | | $T_j$ = 125°C | | 1 | mA |

**Note 1:** minimum $I_{GT}$ is guaranted at 5% of $I_{GT}$ max.

**Note 2:** for both polarities of A2 referenced to A1.

**Table 6: Thermal resistance**

| Symbol | Parameter | | Value | Unit |
|---|---|---|---|---|
| $R_{th(j-c)}$ | Junction to case (AC) | TO-220AB | 1.8 | °C/W |
| | | TO-220AB Insulated | 2.7 | |
| $R_{th(j-a)}$ | Junction to ambient | TO-220AB<br>TO-220AB Insulated | 60 | °C/W |

**Figure 1: Maximum power dissipation versus RMS on-state current (full cycle)**

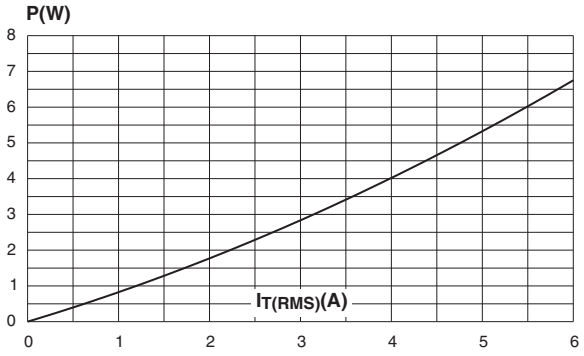


**Figure 2: RMS on-state current versus case temperature (full cycle)**

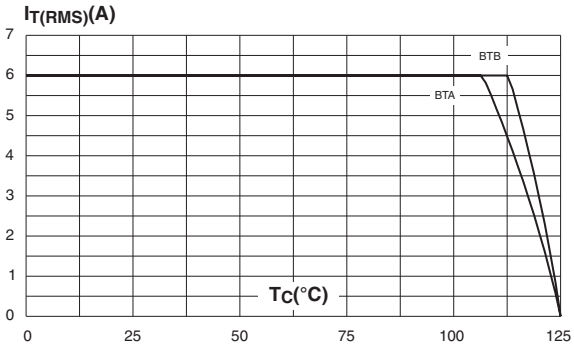


**Figure 3: Relative variation of thermal impedance versus pulse duration**

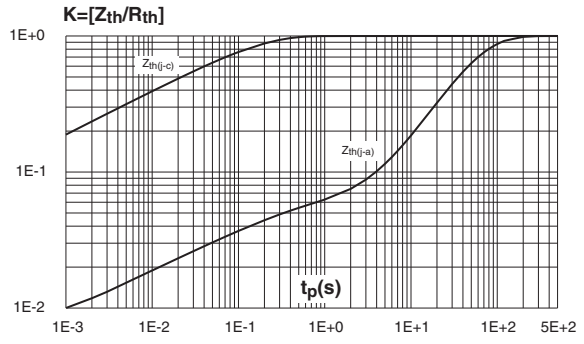


**Figure 4: On-state characteristics (maximum values)**

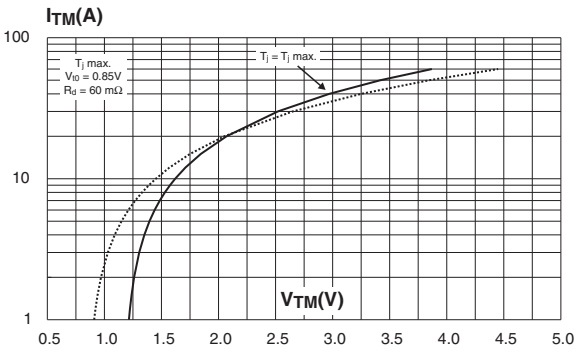

**Figure 5: Surge peak on-state current versus number of cycles**

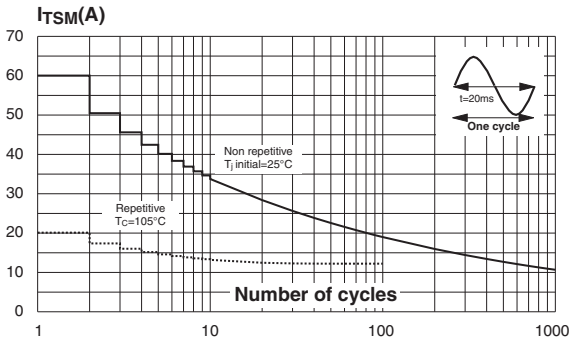


**Figure 6: Non-repetitive surge peak on-state current for a sinusoidal pulse with width $t_p$ < 10 ms and corresponding value of $I^2t$**

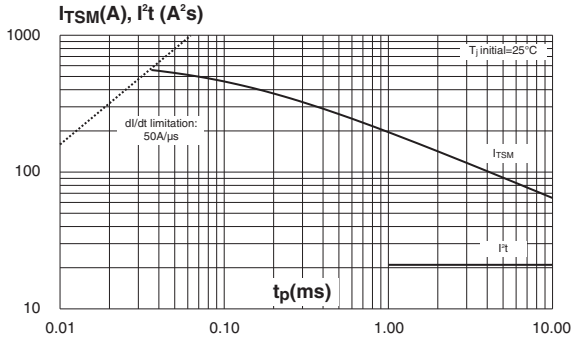


**Figure 7: Relative variation of gate trigger current, holding current and latching current versus junction temperature (typical values)**

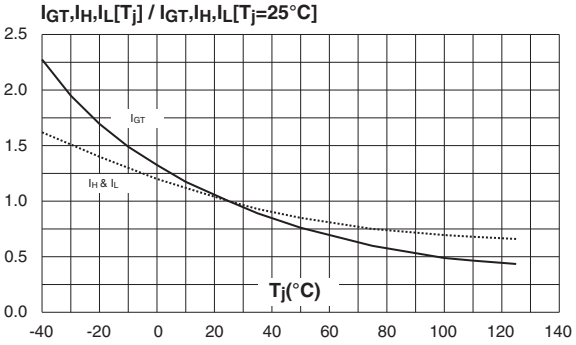


**Figure 8: Relative variation of critical rate of decrease of main current versus (dV/dt)c (typical values) (Snubberless & logic level types)**

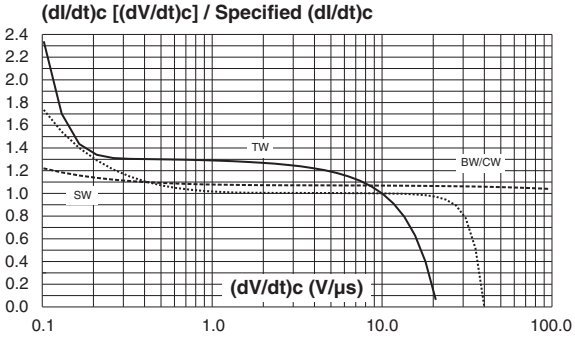


**Figure 9: Relative variation of critical rate of decrease of main current versus (dV/dt)c (typical values) (Standard types)**

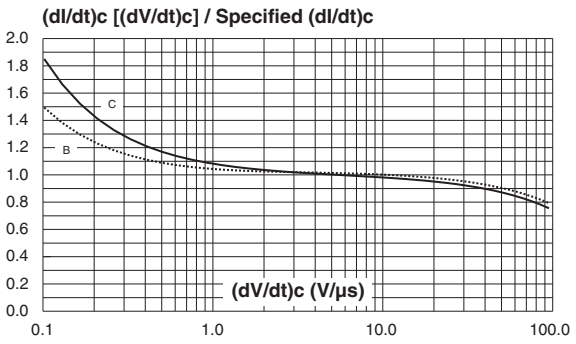


**Figure 10: Relative variation of critical rate of decrease of main current versus junction temperature**

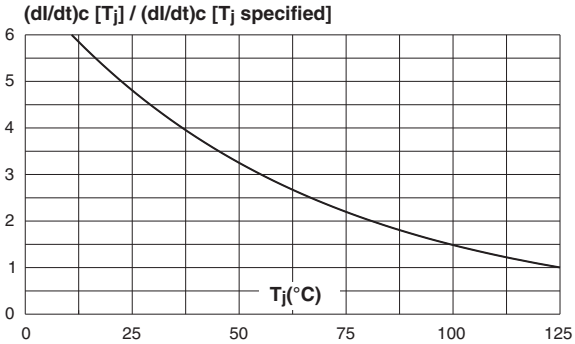

**Figure 11: Ordering Information Scheme**

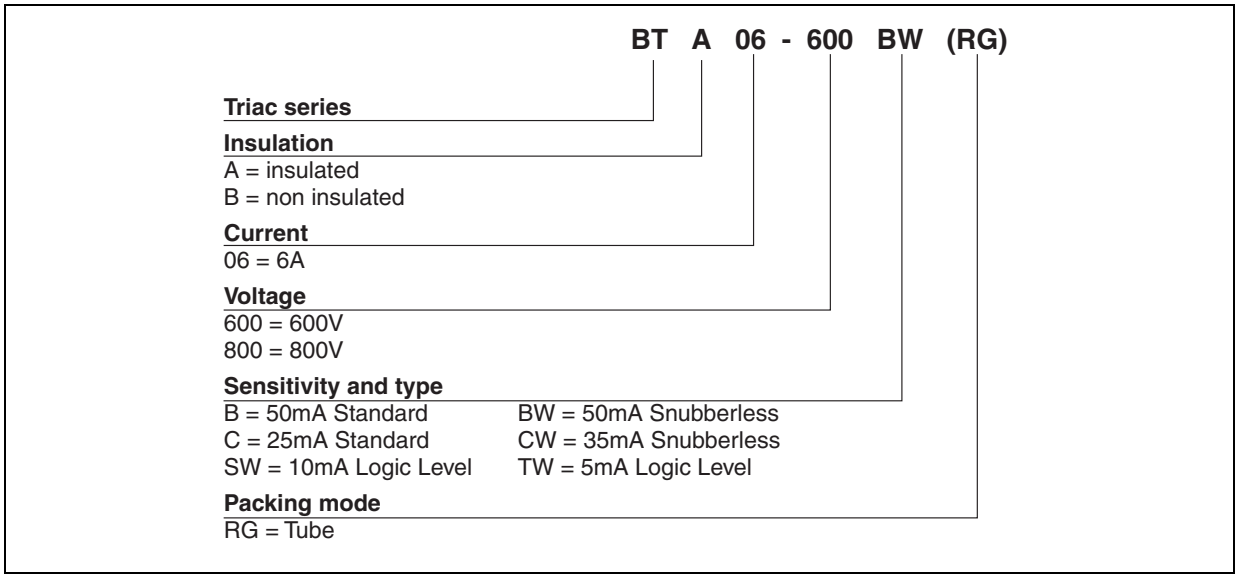


**Table 7: Product Selector**

| Part Number | Voltage (xxx) | | Sensitivity | Type | Package |
|---|---|---|---|---|---|
| | 600 V | 800 V | | | |
| BTA/BTB06-xxxB | X | X | 50 mA | Standard | TO-220AB |
| BTA/BTB06-xxxBW | X | X | 50 mA | Snubberless | TO-220AB |
| BTA/BTB06-xxxC | X | X | 25 mA | Standard | TO-220AB |
| BTA/BTB06-xxxCW | X | X | 35 mA | Snubberless | TO-220AB |
| BTA/BTB06-xxxSW | X | X | 10 mA | Logic level | TO-220AB |
| BTA/BTB06-xxxTW | X | X | 5 mA | Logic Level | TO-220AB |

**BTB:** non insulated TO-220AB package

**Figure 12: TO-220AB (insulated and non insulated) Package Mechanical Data**

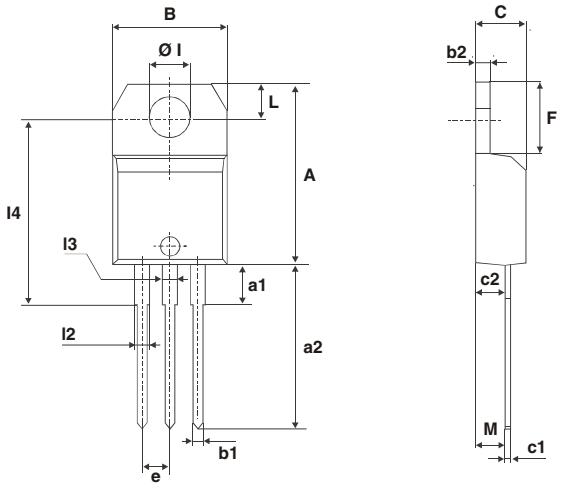


| REF. | DIMENSIONS | | | | | |
|---|---|---|---|---|---|---|
| | Millimeters | | | Inches | | |
| | Min. | Typ. | Max. | Min. | Typ. | Max. |
| A | 15.20 | | 15.90 | 0.598 | | 0.625 |
| a1 | | 3.75 | | | 0.147 | |
| a2 | 13.00 | | 14.00 | 0.511 | | 0.551 |
| B | 10.00 | | 10.40 | 0.393 | | 0.409 |
| b1 | 0.61 | | 0.88 | 0.024 | | 0.034 |
| b2 | 1.23 | | 1.32 | 0.048 | | 0.051 |
| C | 4.40 | | 4.60 | 0.173 | | 0.181 |
| c1 | 0.49 | | 0.70 | 0.019 | | 0.027 |
| c2 | 2.40 | | 2.72 | 0.094 | | 0.107 |
| e | 2.40 | | 2.70 | 0.094 | | 0.106 |
| F | 6.20 | | 6.60 | 0.244 | | 0.259 |
| ØI | 3.75 | | 3.85 | 0.147 | | 0.151 |
| l4 | 15.80 | 16.40 | 16.80 | 0.622 | 0.646 | 0.661 |
| L | 2.65 | | 2.95 | 0.104 | | 0.116 |
| l2 | 1.14 | | 1.70 | 0.044 | | 0.066 |
| l3 | 1.14 | | 1.70 | 0.044 | | 0.066 |
| M | | 2.60 | | | 0.102 | |

In order to meet environmental requirements, ST offers these devices in ECOPACK® packages. These packages have a Lead-free second level interconnect . The category of second level interconnect is marked on the package and on the inner box label, in compliance with JEDEC Standard JESD97. The maximum ratings related to soldering conditions are also marked on the inner box label. ECOPACK is an ST trademark. ECOPACK specifications are available at: www.st.com.

**Table 8: Ordering Information**

| Ordering type | Marking | Package | Weight | Base qty | Delivery mode |
|---|---|---|---|---|---|
| BTA/BTB06-xxxyzRG | BTA/BTB06-xxxyz | TO-220AB | 2.3 g | 50 | Tube |

**Note:** xxx = voltage, yy = sensitivity, z = type

**Table 9: Revision History**

| Date | Revision | Description of Changes |
|---|---|---|
| Apr-2002 | 5A | Last update. |
| 13-Feb-2006 | 6 | TO-220AB delivery mode changed from bulk to tube.<br>ECOPACK statement added. |

Information furnished is believed to be accurate and reliable. However, STMicroelectronics assumes no responsibility for the consequences of use of such information nor for any infringement of patents or other rights of third parties which may result from its use. No license is granted by implication or otherwise under any patent or patent rights of STMicroelectronics. Specifications mentioned in this publication are subject to change without notice. This publication supersedes and replaces all information previously supplied. STMicroelectronics products are not authorized for use as critical components in life support devices or systems without express written approval of STMicroelectronics.

The ST logo is a registered trademark of STMicroelectronics.
All other names are the property of their respective owners

© 2006 STMicroelectronics - All rights reserved

**STMicroelectronics group of companies**
Australia - Belgium - Brazil - Canada - China - Czech Republic - Finland - France - Germany - Hong Kong - India - Israel - Italy - Japan - Malaysia - Malta - Morocco - Singapore - Spain - Sweden - Switzerland - United Kingdom - United States of America
**www.st.com**

# Mouser Electronics

Authorized Distributor

Click to View Pricing, Inventory, Delivery & Lifecycle Information:

STMicroelectronics:

BTA06-600BRG BTA06-600TRG BTA06-600CRG BTA06-600ARG BTB06-600TRG BTB06-600BRG BTB06-600CRG BTA06-400CRG BTA06-400TRG BTB06-600BWRG BTB06-600CWRG BTB06-600SWRG BTB06-600TWRG BTA06-800BWRG BTB06-800SWRG BTA06-600TWRG BTA06-600BWRG BTA06-600SWRG BTA06-600CWRG BTA06-800CRG BTA06-800TWRG BTB06-800TWRG BTA06-600SRG BTA06-800CWRG BTA06-400ARG