G-NOR OPTOELECTRONICS Co.,Ltd.

Lighting
LED TECHNOLOGY

GNL-10003xx
(Φ10mm ROUND TYPE)
Ultra Brightness

ABSOLUTE MAXIMUM RATING:(Ta=25℃)

Parameter			Unit
DC Forward Current	30		mA
Reverse Voltage	5		V
Reverse Current (Vr-5V)	10		μA
Peak Forward Current ,tw ,=1 msec Duty ,=1/20	150		mA
Operation Temperature	-40	+80	℃
Storage Temperature	-40	+100	℃
Solder Dip (5 seconds,1.6mm from body) Temperature	300	±5	℃

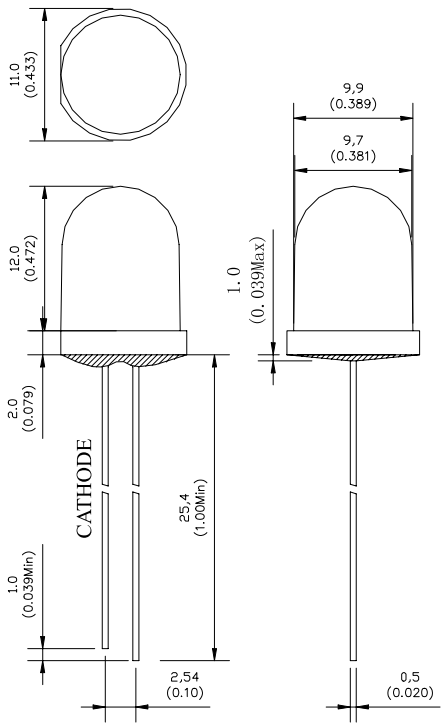

Part Number	EMITTED COLOR		Lens Color	Peak Wavelength (nm)	Vf (v) Typ.	IV (If=20mA) mcd		View Angle 2θ1/2
						Min.	Typ.	
GNL-10003SRD	GaAlAs	Super Red	Red Diffused	660	1.9	50	80	45°
GNL-10003LRD	GaAlAs	Super Red	Red Diffused	660	1.9	60	100	45°
GNL-10003SRT	GaAlAs	Super Red	Red Transparent	660	1.9	250	400	20°
GNL-10003SRC	GaAlAs	Super Red	Water Clear	660	1.9	300	500	30°
GNL-10003LRC	GaAlAs	Super Red	Water Clear	660	1.9	200	400	20°
GNL-10003URC	GaAlAs	Super Red	Water Clear	660	1.9	1000	1500	20°
GNL-10003UEC	AlGaInP	Super Orange	Water Clear	625	2.0	1500	2000	20°
GNL-10003GC	GaP	Green	Water Clear	565	2.0	40	50	20°
GNL-10003UGC	AlGaInP	Yellow Green	Water Clear	572	2.0	1400	1600	25°
GNL-10003YC	GaAsP	Yellow	Water Clear	585	2.0	40	50	20°
GNL-10003UYC	AlGaInP	Super Yellow	Water Clear	589	2.0	1200	1800	20°
GNL-10003BC	InGaN	Super Blue	Water Clear	470	3.5	2000	3000	20°
GNL-10003UBC	InGaN	Ultra Super Blue	Water Clear	470	3.5	3000	4000	15°
GNL-10003BGC	AlGaInp	Super Bluish Green	Water Clear	505	3.5	9000	10000	20°
GNL-10003PGC	AlGaInp	Super Pure Green	Water Clear	525	3.5	9000	11000	20°
GNL-10003UWC	InGaN	Ultra Super White	Water Clear	5500K-7000K	3.5	8000	9000	20°
GNL-10003VC	InGaN	Super Violet	Water Clear	400	3.5	100	300	20°
GNL-10003PGC-1	InGaN	Super Pure Green	Water Clear	525	3.5	7000	10000	15°
GNL-10003UEC-1	InGaN	Super Orange	Water Clear	625	1.9	1500	2000	20°
GNL-10003UYC-1	AlGaInp	Super Yellow	Water Clear	589	2.0	850	1000	15°
GNL-10003BC-1	GaN	Super Bule	Water Clear	470	3.5	1500	2200	15°